Cybex Total Access Row
Owner's and Service Manual

Strength Systems

Part Number 14030-999-4 D

www.cybexinternational.com

Cybex Total Access Row
Owner's and Service Manual

Strength Systems

Part Number 14030-999-4 D

Cybex® and the Cybex logo are registered trademarks of Cybex International, Inc.
VR3® and its mark are registered trademarks of Cybex International, Inc.

DISCLAIMER: Cybex International, Inc., makes no representations or warranties regarding the contents of this manual. We reserve the right to revise this document at any time or to make changes to the product described within it without notice or obligation to notify any person of such revisions or changes.

© Copyright 2010, Cybex International, Inc. All rights reserved.

Printed in the United States of America.
10 Trotter Drive Medway, MA 02053 • 508-533-4300 • FAX 508-533-5183
www.cybexinternational.com • techhelp@cybexintl.com • 14030-999-4 D • March 2010

Table of Contents

Front Pages
Table of Contents i
Declaration of Conformity ii

1 Safety
Safety 1-1
Safety Guidlines and Practices 1-2
Warning/Caution Decals 1-3
Regular Maintenance Activities. 1-6
Using Proper Form 1-6

2 Exercises
Intended Use 2-1
Instructions 2-1

3 Customer Service
Contacting Service 3-1
Ordering parts 3-1
Return Material Authorization (RMA). 3-2
Damaged Parts 3-3

4 Assembly 4-1

5 Maintenance
Daily Procedures 5-1
Weekly Procedures 5-4
Yearly Procedures 5-6
Environment. 5-7
Storage 5-7

6 Service 6-1

DECLARATION OF CONFORMITY **September 4, 2007**

We,

Manufacturer: Cybex International, Inc.
10 Trotter Drive
Medway, MA 02053
USA

(508) 533-4300

EU Representative: Cybex Int. UK Ltd
Oak Tree House
Atherstone Rd
Measham.
Swadlincote, Derbyshire DE12 7EL
United Kingdom
+44 (0)845 6060 228

declare under our sole responsibility that the product(s):

Cybex Total Access Stationary Training Equipment – Stationary Strength Equipment

14000, 14010, 14030, 14130, 14040, 14051, 14061, 14220

to which this declaration relates is in conformity with the Standards listed herein below (including any and all relevant modifications):

EN 957 – 1: Stationary Training Equipment. General Safety Requirements and Test Methods

EN 957-2: Stationary training equipment. Strength Training Equipment, additional specific safety requirements and test methods

ASTM F2216 Standard Specification for Selectorized Strength Equipment

Art Hicks
Chief Operating Officer
Cybex International, Inc.
10 Trotter Drive
Medway, MA 02053

Worldwide Headquarters 10 Trotter Drive + Medway, MA 02053, USA + *t* 508.533.4300 + *f* 508.533.5500
151 24th Avenue NW + Owatonna, MN 55060, USA + *t* 507.455.0217 + *f* 507.455.3446

This page intentionally left blank.

1 - Safety

Safety

Read the Owner's Manual carefully before assembling, servicing or using the equipment.

It is the responsibility of the facility owner and/or owner of the equipment to instruct users on proper operation of the equipment and review all labels.

WARNING: Serious injury could occur if these safety precautions are not observed:

User Safety Precautions

- Obtain a medical exam prior to beginning an exercise program.
- Read and understand warning labels and user manual prior to exercising. Obtain instruction prior to use.
- Keep body and clothing free from and clear of all moving parts.
- Inspect machine prior to use. **DO NOT** use if it appears damaged or inoperable.
- **DO NOT** attempt to fix a broken or jammed machine. Notify floor staff.
- Use the machine only for the intended use. **DO NOT** modify the machine.
- Be sure that the weight pin is completely inserted. Use only the pin provided by the manufacturer. If unsure seek assistance.
- Never pin the weights in an elevated position. **DO NOT** use the machine if found in this condition. See assistance from floor staff.
- Children must not be allowed near these machines. Teenagers must be supervised.
- **DO NOT** use if guards are missing or damaged.
- **DO NOT** use dumbbells or other incremental weights, except those provided by the manufacturer.
- Inspect all cables and belts and connections prior to use. **DO NOT** use if any components are worn, frayed or damaged.
- **DO NOT** remove any labeling from equipment. Replace any damaged labels.
- Stop exercising if you feel faint, dizzy or experience pain at any time while exercising and consult your physician.

Facility Safety Precautions

- Read the Owner's Manual carefully before assembling, servicing or using the equipment.
- Securely anchor each machine to the floor using the anchor holes provided in each machine.

  NOTE: *Cybex is not responsible for the actual anchoring of equipment. Consult with a professional contractor.*

  NOTE: *Use fasteners having a minimum of 500 lbs. tensile capacity (3/8" grade 2 bolts or better).*

  NOTE: *If legs/frame does not contact surface, DO NOT pull down with anchors. Shim any leg or frame not in contact with surface using flat washers.*

- Make sure that each machine is set up and operated on a solid level surface. **Do not install equipment on an uneven surface.**
- Make sure that all users are properly trained on how to use the equipment.
- Make sure there is enough room for safe access and operation of the equipment.
- Perform regular maintenance checks on the equipment. Also pay close attention to all areas most susceptible to wear, including (but not limited to) cables, pulleys, belts and grips.
- Immediately replace worn or damaged components. If unable to immediately replace worn or damaged components then remove from service until the repair is made.
- Use only Cybex supplied components to maintain/repair the equipment.
- Keep a repair log of all maintenance activities.
- Inspect all cables and belts and connections prior to use. **DO NOT** use if any components are worn, frayed or damaged.

NOTE: *It is the sole responsibility of the user/owner or facility operator to ensure that regular maintenance is performed.*

Safety Guidelines And Practices

Cybex recommends that all fitness equipment be used in a supervised area. It is recommended that the equipment be located in an access controlled area. Control is the responsibility of the owner. The extent of control is at the discretion of the owner.

It is the responsibility of the purchaser/user of Cybex products to read and understand the owner's manual, and warning labels; as well as instruct all individuals, whether end users or supervising personnel, on proper usage of the equipment.

PROPER USAGE:

Use machine only as described in the manual. Failing to follow proper instructions may result in injury.

Do Not Lean Against or Pull On the framework, weight stack, or any component, whether machine is at rest or in use. Inappropriate or improper use may result in injury to users or third parties (bystanders).

Do not use machine if it is not located on a solid level surface or is improperly installed.

Provide an adequate safety perimeter between the machine, walls and other equipment to ensure that the facility has the proper clearance for usage and training.

SECURING EQUIPMENT:

The machine has holes in the feet, which allow for ease in anchoring to the floor. Cybex strongly recommends that, to eliminate rocking, tipping or falling over due to incorrect usage and misuse, equipment be secured to a solid, level surface.

1. The solid, level surface should not deviate more than 1/8" over a 10' distance or as defined and required by local building and architectural codes.

2. Anchoring of equipment must be completed by a qualified licensed contractor.

3. Anchoring holes are provided on the feet of the frame. All anchoring locations must be used when anchoring the equipment to the floor.
4. Due to the wide variation of flooring on which machines may be anchored or installed, verify anchoring method and anchoring fasteners with a qualified and licensed contractor.
5. A minimum pull out force of 220 lbs/100 kgs is required for each anchor position..
6. Do not use machine until it is properly anchored.

MAINTENANCE:

Preventative maintenance allows proper equipment operation and reduces the risk of injury. Perform the maintenance requirements as specified in the manual.

STANDARD COMPLIANCE:

Cybex products meet or exceed applicable ASTM and EN Standards.

Warning/Caution Decals

Warning decals indicate a potentially hazardous situation, which, if not avoided, could result in death or serious injury.

Caution decals indicate a potentially hazardous situation, which, if not avoided, could result in minor or moderate injury.

The warning and caution decals are shown on the following page. The diagrams following the decals show where each decal is located.

A

WARNING

SERIOUS INJURY COULD OCCUR IF THESE PRECAUTIONS ARE NOT OBSERVED

1. Obtain a medical exam prior to beginning an exercise program.

2. Read and understand warning labels and user manual prior to exercising. Obtain instruction prior to use.

3. Keep body and clothing free from and clear of all moving parts.

4. Inspect machine prior to use. DO NOT use if it appears damaged or inoperable.

5. DO NOT attempt to fix a broken or jammed machine. Notify floor staff.

6. Use the machine only for the intended use. DO NOT modify the machine.

7. Be sure that the weight pin is completely inserted. Use only the pin provided by the manufacturer. If unsure seek assistance.

8. Never pin the weights in an elevated position. DO NOT use the machine if found in this condition. Seek assistance from floor staff.

9. Children must not be allowed near this machine. Teenagers must be supervised.

10. DO NOT use if guards are missing or damaged.

11. DO NOT use dumbbells or other incremental weights, except those provided by the manufacturer.

12. Inspect all cables and belts and connections prior to use. DO NOT use if any components are worn, frayed, or damaged.

13. DO NOT REMOVE THIS LABEL. REPLACE IF DAMAGED.

4605-381-4 A

B

CAUTION

Personal injury may occur.

Keep away from moving parts to avoid injury.

4000Y316-4

C

CAUTION

Seat may fall if improperly engaged.

Verify seat is secure before exercising to avoid injury.

4520-362-4

D

CAUTION

Failure to correctly adjust could result in personal injury.

Always fully engage the detent pin before use to avoid injury.

8500-025-4

Total Access Row - 14030

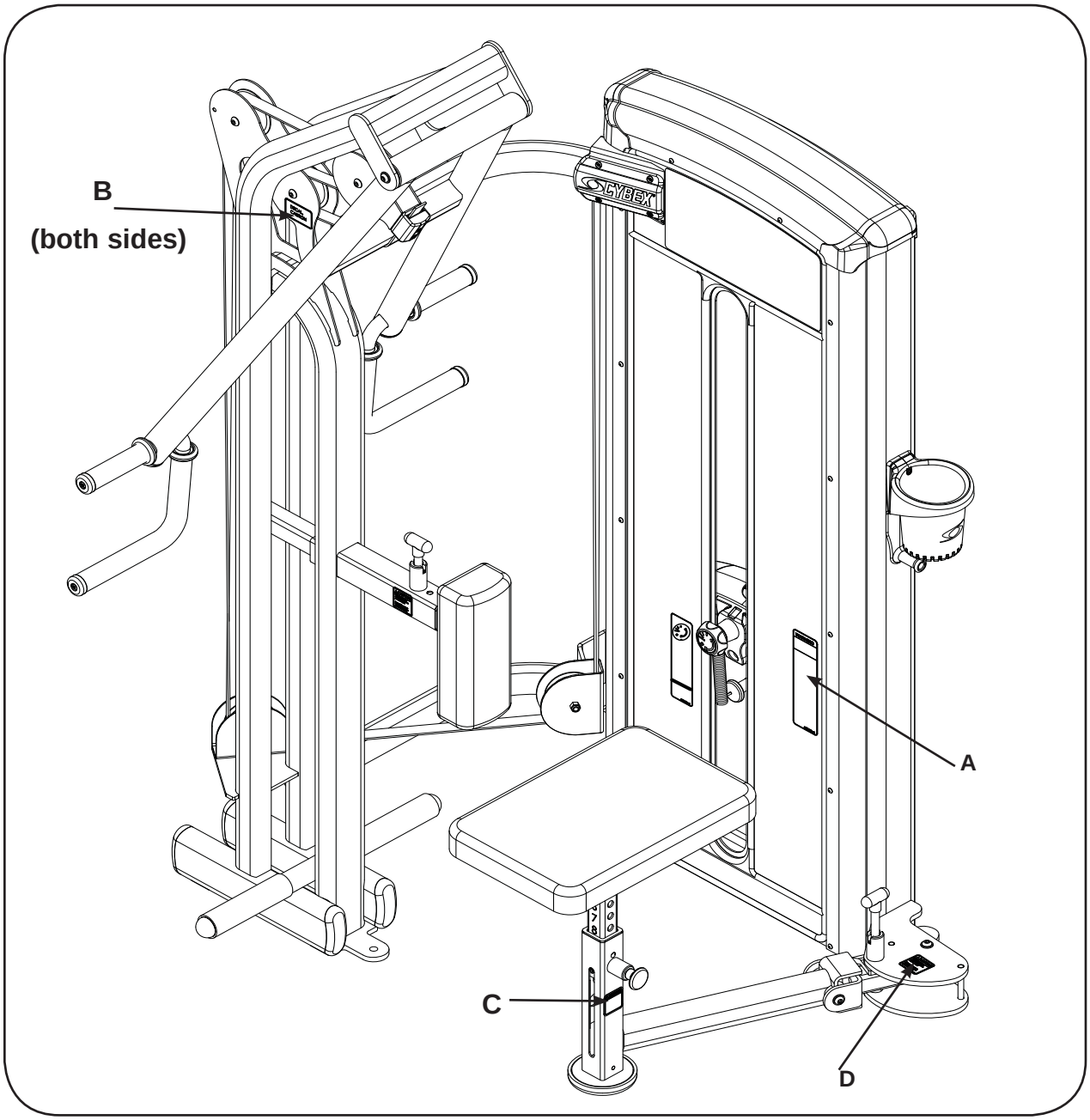

Description	Part No.
A. Warning Label	4605-381-4
B. Caution Decal	4000Y316-4
C. Caution Decal	4520-362-4
D. Caution Decal	8500-025-4

Regular Maintenance Activities

Preventative maintenance activities must be performed to maintain normal operation of your equipment. Keeping a log sheet of all maintenance actions will assist you in staying current with all preventative maintenance activities. The preventative maintenance actions are described in detail in Chapter 5. Briefly, they include:

Daily

1. Clean upholstery.

Weekly

1. Inspect all nuts and bolts for looseness. Tighten as required.
2. Inspect all cables and belts for damage or wear (see Chapter 5). **If a cable or belt is worn or damaged, immediately discontinue use until cable or belt has been replaced.**
3. Check for worn handles, worn snap links, and worn warning labeling. Replace all worn parts immediately.
4. Inspect for loose or worn grips. Replace all worn grips immediately.
5. Inspect weight stacks for proper alignment and operation. Correct all improper alignment and operation issues immediately.
6. Lubricate guide rods using automotive engine oil only.

Yearly

1. Replace all cables and belts at least annually.

Using Proper Form

Before working out, read and understand the exercises located on the placard and in Chapter 2.

2 - Exercise

Intended Use

The intended use of this equipment is to aid or improve general physical fitness and exercise. For commercial use.

Instruction

Read and understand all instructions and warnings prior to using this machine. See Chapter 1, Safety, in the Owner's Manual or consult with floor staff.

MUSCLES USED

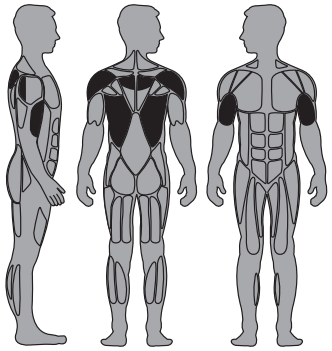

Latissimus Dorsi, Teres Major, Biceps, Middle Trapezius, Rear Deltoid, Rhomboid

START

FINISH

NOTE: *Motion Developed: Shoulder Extension, Elbow Flexion*

NOTE: *Do not turn knob when weight stack is elevated.*

NOTE: *All adjustment points on the machine have yellow handles or knobs.*

NOTE: *See next page for "Set Up" and "Movement."*

Set Up - Consult floor staff if assistance is required.

1. Adjust seat height so handles are level with shoulders.

Wheelchair users: *Lift detent pin and lock to the "out" position. Rotate seat outward to allow access.*

2. Adjust chest pad to allow comfortable reach of handles.

3. Choose a suitable hand grip position with hands in front of and level with shoulders.

Movement

1. Pull handles until elbows are at sides.

3 - Customer Service

Contacting Service

Hours of phone service are Monday through Friday from 8:30 a.m. to 6:00 p.m. Eastern Standard Time.

For Cybex customers living in the USA, contact Cybex Customer Service at **888-462-9239**.

For Cybex customers living outside the USA, contact Cybex Customer Service at **508-533-4300** or fax **508-533-5183**.

Find information on the web at www.eCybex.com or by e-mail at techhelp@cybexintl.com.

Ordering Parts

Fax your order to **508-533-5183**. To speak with a customer service representative, call **888-462-9239** (for customers living within the USA) or **508-533-4300** (for customers outside the USA). You may also contact us through e-mail at techhelp@cybexintl.com.

Having the following information ready when calling will assist our Cybex representatives in serving you.

- **Unit Serial Number**
- **Product Name**

The unit serial number and product name can be found on the serial number decal. See Chapter 6 for exact location of serial number decal.

- **Part Description**
- **Part Number**

Part descriptions and part numbers are located in Chapter 6 of this manual.

- **Shipping Address**
- **Contact Name**

In addition to your shipping address and contact name, your account number is helpful but not required.

Return Material Authorization (RMA)

The Return Material Authorization (RMA) system outlines the procedures to follow when returning material for placement, repair or credit. The system assures that returned materials are properly handled and analyzed. Follow the following procedures carefully.

Contact your authorized Cybex dealer on all warranty-related matters. Your local Cybex dealer will request a RMA from Cybex, if applicable. Under no circumstances will defective parts or equipment be accepted by Cybex without proper RMA and an Automated Return Service (ARS) label.

1. Call the Customer Service Hotline listed above for the return of anything that is defective.

2. Provide the technician with a detailed description of the problem you are having or the defect in the item you wish to return.

3. Provide the model and serial number of your Cybex equipment.

4. At Cybex's discretion, the technician may request that you return the problem part(s) to Cybex for evaluation and repair or replacement. The technician will assign you a RMA number and will send you an ARS label. The ARS label and the RMA numbers must be clearly displayed on the outside of the package that contains the item(s) to be returned. Include the description of the problem, the serial number of the Cybex equipment and the name and address of the owner in the package along with the part(s).

5. Forward the package through UPS to Cybex.

Attn: Customer Service Department

Cybex International, Inc.

1975 24th Ave SW

Owatonna, MN 55060

NOTE: *Merchandise returned without an RMA number on the outside of the package or shipments sent COD will not be accepted by the Cybex receiving department.*

Damaged Parts

Materials damaged in shipment should not be returned for credit. Shipping damages are the responsibility of the carrier (UPS, Federal Express, trucking companies, etc.)

Apparent Damage - Upon receipt of your shipment, check all items carefully. Any damage seen with a visual check must be noted on the freight bill and signed by the carrier's agent. Failure to do so will result in the carriers refusal to honor your damage claim. The carrier will provide you with the required forms for filing such claims.

Concealed Damage - Damage not seen with a visual check upon receipt of a shipment but noticed later must be reported to the carrier as soon as possible. Upon discovery of the damage, a written or phone request to the carrier asking them to perform an inspection of the materials must be made within ten days of the delivery date. Keep all shipping containers and packing materials as they will be needed in the inspection process. The carrier will provide you with an inspection report and the necessary forms for filing a concealed damage claim. Concealed damage claim is the carrier's responsibility.

This page intentionally left blank

4 - Assembly

TOOLS REQUIRED

- 7/32" Allen wrench
- 1/8" Allen wrench
- Medium weight automotive engine oil
- Torque wrench
- 3/4" Wrench

NOTE: *Two people will be required for this procedure.*

NOTE: *It is the responsibility of the facility owner/owner of the equipment to ensure that there is appropriate clearance around each machine to allow for safe use and passage.*

NOTE: *Refer to chapter 6 for reference diagrams.*

1. **Read and understand all instructions thoroughly before starting any of the procedures listed on this instruction sheet.**

2. **Verify you have received the appropriate configuration.**

   A. Verify that you received the correct color machine that you ordered.

   B. Verify you received the proper weight stack.

   C. Verify you received the appropriate owner's manual.

   D. Verify you received the warranty sheet.

   E. Verify you received the weight stack decals.

3. **Move to desired location.**

4. **Remove shipping feet.**

WARNING: ***Use extreme caution when removing shipping cones and installing feet. Failure to do so could result in injury.***

   A. With an assistant, carefully remove each (standard) cone-shaped shipping support using a 3/4" socket or wrench.

   B. Cut shipping tie securing top weight.

   C. Carefully place rubber feet (supplied with machine) on each foot of the frame.

5. **Installing the weight stack.**

   A. If weight stack is already installed, proceed to step 9.

   B. Using a 1/8" Allen wrench, remove the two Button Head Socket Cap Screws (BHSCS) securing the bottom bracket to the frame. ***NOTE:*** *Do not remove middle BHSCS securing shroud to bottom bracket.*

   C. Remove the remaining BHSCS securing the back shroud to the frame. ***NOTE:*** *After final BHSCS is removed shroud will slide down to the floor with bottom support bracket attached.*

   D. Carefully slide shroud out of machine.

E. Slide spring loaded top guide rod cap down guide rod until guide rod cap is clear of frame. ***NOTE:*** *Top guide rod cap is spring loaded.*

F. Slowly release grasp of guide rod cap. ***NOTE:*** *Guide rod cap contains a compression spring that will fly if grasp is not released slowly.*

G. Remove guide rod cap and spring and set aside.

H. Repeat steps 5F-5H for other rod guide.

I. Carefully lean guide rods slightly outward, away from machine to clear pulley. ***NOTE:*** *Excessive pressure on guide rods may damage lower guide rod caps.*

J. Slide top weight up and out of machine and carefully set it aside.

K. Wipe guide rods clean over entire length. Lubricate with light coating of medium weight automotive engine oil.

L. Have an assistant hold the guide rods vertical.

M. Carefully align weight plate over guide rods and slowly lower weight plate. ***NOTE:*** *When installing weight plates, position plates so wide edges of bushing face upward and narrow edges of bushing face downward. See Figures 1A and 1B.*

N. Repeat step 5M-5N to install each weight plate.

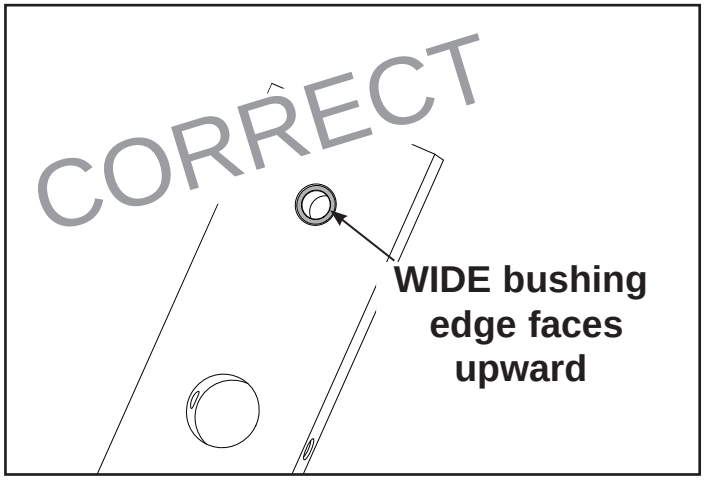

Figure 1A

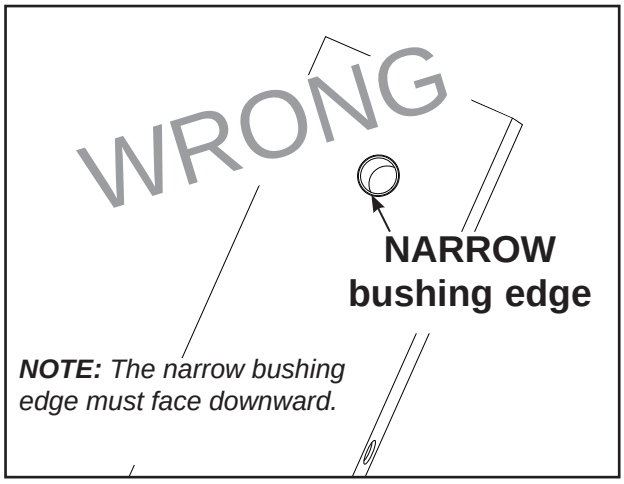

Figure 1B

O. Slide top weight over guide rods.

P. Place springs and guide rod caps on guide rods (removed from step 5G).

Q. Compress guide rod caps and ailgn guide rod caps with weight frame holes and secure in place. ***NOTE:*** *Guide rod caps must snap or lock into weight frame holes.*

6. Belt Routing.

A. Verify belt is routed through top of pulley bracket and then route end of belt down to the top weight.

B. Carefully lift top weight and verify that the position of the belt clamp (on the top weight) is aligned properly with the top pulley bracket.

C. Slide belt through slot in belt clamp.

D. Verify belt and insert are installed properly, as shown in Figure 2A. ***NOTE:*** *Do not install the insert backwards as shown in Figure 2B.*

E. Pull belt tight and secure belt to clamp with the two set screws. ***NOTE:*** *Torque set screws 300-350 in./lbs.*

F. Place weight stack pin in each plate to verify proper installation.

G. Without selecting any resistance, lift top weight up and down (simulating normal operation).

H. Have an assistant verify that the belt is moving smoothly and is routed straight from the top pulley bracket to the top weight belt clamp.

I. Turn the Increment Weight Adjusting Knob to select 0 lbs or 0 kg.

Correct belt routing

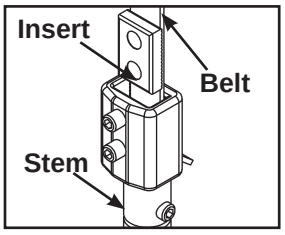

Figure 2A

Wrong belt routing

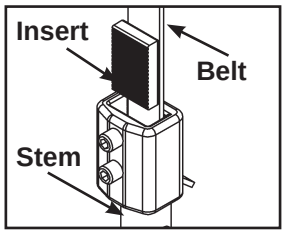

Figure 2B

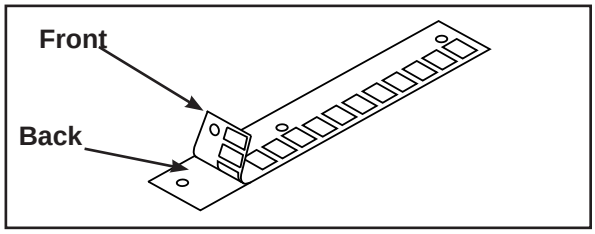

Figure 3

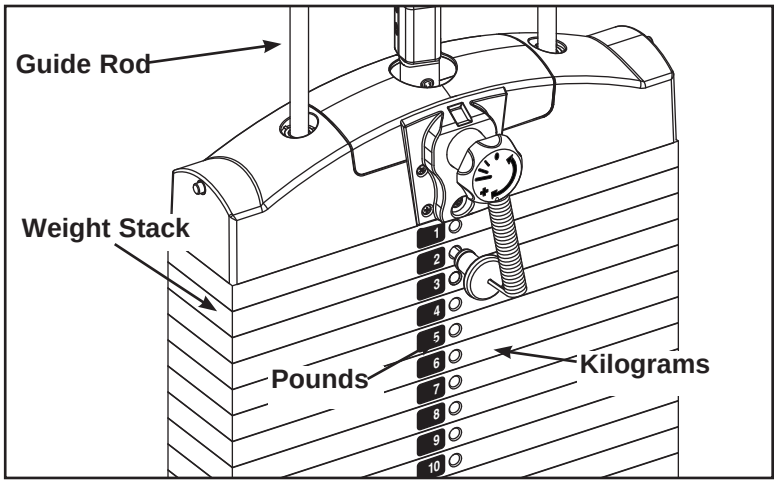

Figure 4

7. Install back shrouds.

A. Carefully place shroud into position.

B. Starting at the bottom replace the two BHSCS (removed in step 5D) to secure bottom support bracket to the shroud. Install but do not tighten remaining BHSCS securing shroud.

C. Tighten all BHSCS.

8. Install weight plate decals.

A. Slowly and carefully peel off back side of decal. ***NOTE:*** *When peeling off back cover, make sure that the decals remain attached to the front sticker.* Figure 3.

B. Insert a guide pin through each hole of the template. ***NOTE:*** *A guide pin can be anything that fits through the weight stack hole, such as a weight stack selector pin.*

C. Carefully align decal and rub it onto weight plates.

D. Carefully remove front side, leaving decals adhering to weight plates. See Figure 4.

NOTE: *It is important that you perform regular inspection and maintenance activities on your equipment. See the CYBEX Owner's Manual for inspection and maintenance activities. If you do not have a CYBEX Owner's Manual or if you have any questions or concerns, call CYBEX Customer Relations at 888-462-9239.*

9. Verify proper operation

10. Securely anchor machine to the floor.

A. Securely anchor machine to the floor using the anchor holes provided in each machine.

NOTE: *Cybex is not responsible for the actual anchoring of equipment. Consult with a professional contractor.*

NOTE: *Use fasteners having a minimum of 500 lbs. tensile capacity (3/8" grade 2 bolts or better).*

NOTE: *If legs/frame does not contact surface, DO NOT pull down with anchors. Shim any leg or frame not in contact with surface using flat washers.*

Chapter 5 - Maintenance

All preventive maintenance activities must be performed on a regular basis. Performing routine preventive maintenance actions can aid in providing safe, trouble-free operation of all Cybex Strength Systems equipment.

NOTE: *Cybex is not responsible for performing regular inspection and maintenance actions for your machines. Instruct all personnel in equipment inspection and maintenance actions and also in accident reporting/recording. Cybex phone representatives are available to answer any questions or concerns that you may have.*

⚠ CAUTION

Use only Cybex replacement parts when servicing. Failure to do so could result in personal injury.

NOTE: *All inspections and repairs must be performed by trained service personnel only.*

Cybex will void warranty if non-Cybex replacement parts are used.

Daily Procedures

1. **Upholstery -** Wipe down all upholstery as per the recommendations listed below for light soiling and more difficult stains.

   Light Soiling

   - A solution of 10% household liquid dish soap with warm water applied with a soft damp cloth.
   - If necessary, a solution of liquid cleanser and water applied with a soft bristle brush. Wipe away the residue with a water dampened cloth.

More Difficult Stains

- Dampen a soft white cloth with a solution of 10% household bleach (sodium hypochlorite), 90% water. Rub gently. Rinse with a water dampened cloth to remove bleach concentration.

- The same procedure can be used with full strength household bleach, if necessary.

- Allow bleach to puddle on the affected area or apply with a soaked cloth for approximately 30 minutes. Rinse with a water dampened cloth to remove any remaining bleach concentration.

Alternative Method for Difficult Stains

- Dampen a soft white cloth with rubbing alcohol and rub gently. Rinse with a water dampened cloth to remove any remaining rubbing alcohol concentration.

NOTE: *To restore luster, a light coat of spray furniture wax can be used. Apply for 30 seconds and follow with a light buffing using a clean white cloth.*

Please Review Carefully

When using strong cleaning agents such as rubbing alcohol or bleach, it is advisable to first test in an inconspicuous area. Other cleaning agents may contain harsh or unknown solvents and are subject to formula changes by the product manufacturer without notice. Should you desire to use other cleaning agents, carefully try them in an inconspicuous area to determine potential damage to the material. Never use harsh solvents or cleaners which are intended for industrial applications. To clean stained or soiled areas, a soft white cloth is recommended. Avoid use of paper towels.

Cleaning products may be harmful/irritating to your skin, eyes, etc. Use protective gloves and eye protection. Do not inhale or swallow any cleaning product. Protect surrounding area/clothing from exposure. Use in a well ventilated area. Follow all product manufacturer's warnings. CYBEX and its vendors cannot be held responsible for damage or injuries resulting from the use or misuse of cleaning products.

2. **Frames -** Wipe down all frames using a mild solution of warm water and car wash soap. Be sure to dry thoroughly. ***AVOID*** acid or chlorine based cleaners and also cleaners containing abrasives as these could scratch or damage the equipment.

3. **Chrome -** Clean chrome tubes, first using chrome polish and then using a car wax seal. Neutral cleaners with a pH between 5.5 and 8.5 are recommended. Be sure to dry thoroughly. ***AVOID*** acid or chlorine based cleaners and also cleaners containing abrasives as these could scratch or damage the equipment.

4. Guidelines for cleaning front panel:

- Use clean soft cloths or sponges for application of cleaners and again for washing and rinsing.
- Follow up the application with warm water rinse.
- Don't use abrasives or high alkaline cleaners.
- Don't leave cleaners on for long periods, wash immediately.
- Don't apply cleaners in direct sunlight or at elevated temperatures.
- Don't use scrapers, squeegees or razors.
- Don't clean with gasoline.

5. Compatible Cleaners and Detergents:

- Formula 409
- Top Job
- Joy
- Palmolive
- Windex with Ammonia D

6. To Minimize Fine or Hairline Scratches:

Mild automotive polish applied and removed with a soft, clean cloth will help fill scratches.

7. Suggested Polishes:

- Johnson Paste Wax
- Mirror Glaze #10 Plastic Polish (by Mirror Bright Polish Co.)
- Novus Plastics Polish #1, #2 (by Novus Inc.)

Weekly Procedures

1. Check all nuts and bolts for looseness. Tighten as required.
2. Inspect all belts (entire length) for any ***non-uniformity and wear.***

   Immediately replace belt if any of the following conditions are present:

	3D View	3D or Side View
• **Peeling of the belt's skin.**	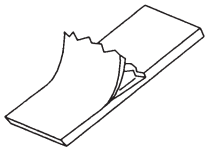	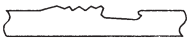
• **Wave in the belt.**	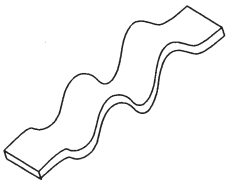	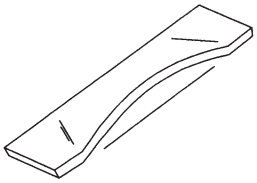
• **Belt is necked down (narrow section).**	Replace belt if any section is over 1/32" (.03") narrower than rest of the belt. 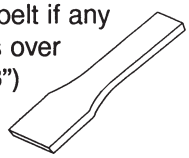	Examine edge of belt (both sides). Replace belt if any section is narrower than the rest.
• **Cracks or splits.**	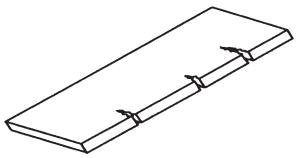	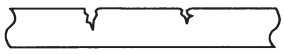
• **One or more strands of kevlar hanging out.** ***NOTE:*** *Also replace belt if there is a significant amount of frayed kevlar.*	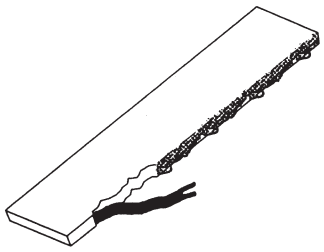	

3. Some machines use cables in addition to belts. Inspect all cables for wear or damage and proper tension. When inspecting cables, run your fingers on the cable, paying particular attention to bends in the cable and attachment points.

Replace all worn cables immediately. The following conditions may indicate a worn cable:

- A tear or crack in the cable sheath that exposes the cable. See Figure 1

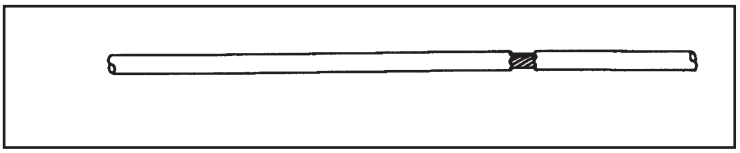

Figure 1

- A kink in the cable. See Figure 2.

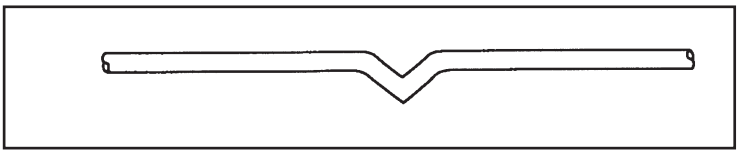

Figure 2

- A curled sheath. See Figure 3.

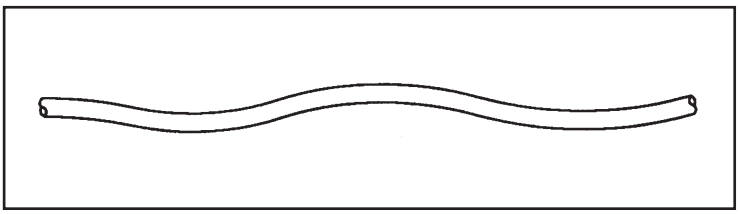

Figure 3

- "Necking", a stretched cable sheath. See Figure 4.

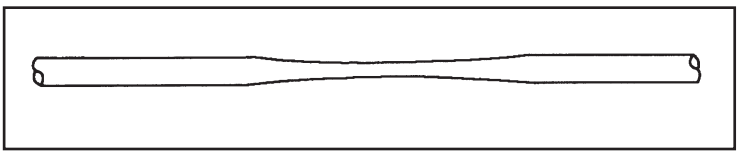

Figure 4

4. Inspect bars and handles for wear, paying particular attention to tab area connecting points.

   Replace all worn handles immediately.

5. Inspect snap links for proper latching (indicates wear).

   Replace all worn snap links immediately.

6. Inspect for loose or worn grips.

   Replace all loose or worn grips immediately.

7. Inspect all labeling for readability. This includes instructional placards, warning and caution decals.

   Replace all worn labeling immediately.

8. Inspect all weight stacks for proper alignment and operation.

   Correct all improper alignment and operation issues immediately.

9. Wipe *Weight Stack Guide Rods* clean over entire length. Lubricate with a light coat of medium weight automotive engine oil.

Yearly Procedures

1. Replace all belts and cables at least annually.

Environment

Static Electricity - Depending upon where you live, you may experience dry air, causing a common experience of static electricity. This may be especially true in the winter time. You may notice a static build-up just by walking across a carpet and then touching a metal object. The same can hold true while working out on your unit. You may experience a shock due to the build-up of static electricity on your body and the discharge path of the unit. If you experience this type of situation, you may want to increase the humidity to a comfortable level through the use of a humidifier.

Humidity - The unit is designed to function normally in an environment with a relative humidity range of 30% to 75%.

NOTE: *Do not install or use the unit in an area of high humidity, such as in the vicinity of a steam room, sauna, indoor pool or outdoors. Exposure to extensive water vapor, chlorine and/or bromine could adversely affect the electronics as well as other parts of the machine.*

Temperature - The unit is designed to function normally in an environment with an ambient temperature range of 50°F (10°C) to 104°F (40°C) degrees.

Storage

Humidity - The unit can be shipped and stored in an environment with a relative humidity range of 10% to 90%.

NOTE: *Do not store the unit in an area of high humidity, such as in the vicinity of a steam room, sauna, indoor pool or outdoors. Exposure to extensive water vapor, chlorine and/or bromine could adversely affect the electronics as well as other parts of the machine.*

Temperature - The unit can be shipped and stored in an environment with an ambient temperature range of 32°F (0°C) and 140°F (60°C) degrees.

This page intentionally left blank

6 - Service

Please refer to the next several pages for parts lists, exploded-view diagrams and cable and belt routing diagrams.

⚠ CAUTION

Use only Cybex replacement parts when servicing. Failure to do so could result in personal injury.

NOTE: *All inspections and repairs must be performed by trained service personnel only.*

Cybex will void warranty if non-Cybex replacement parts are used.

This page intentionally left blank

ROW

PRODUCT NO. 14030

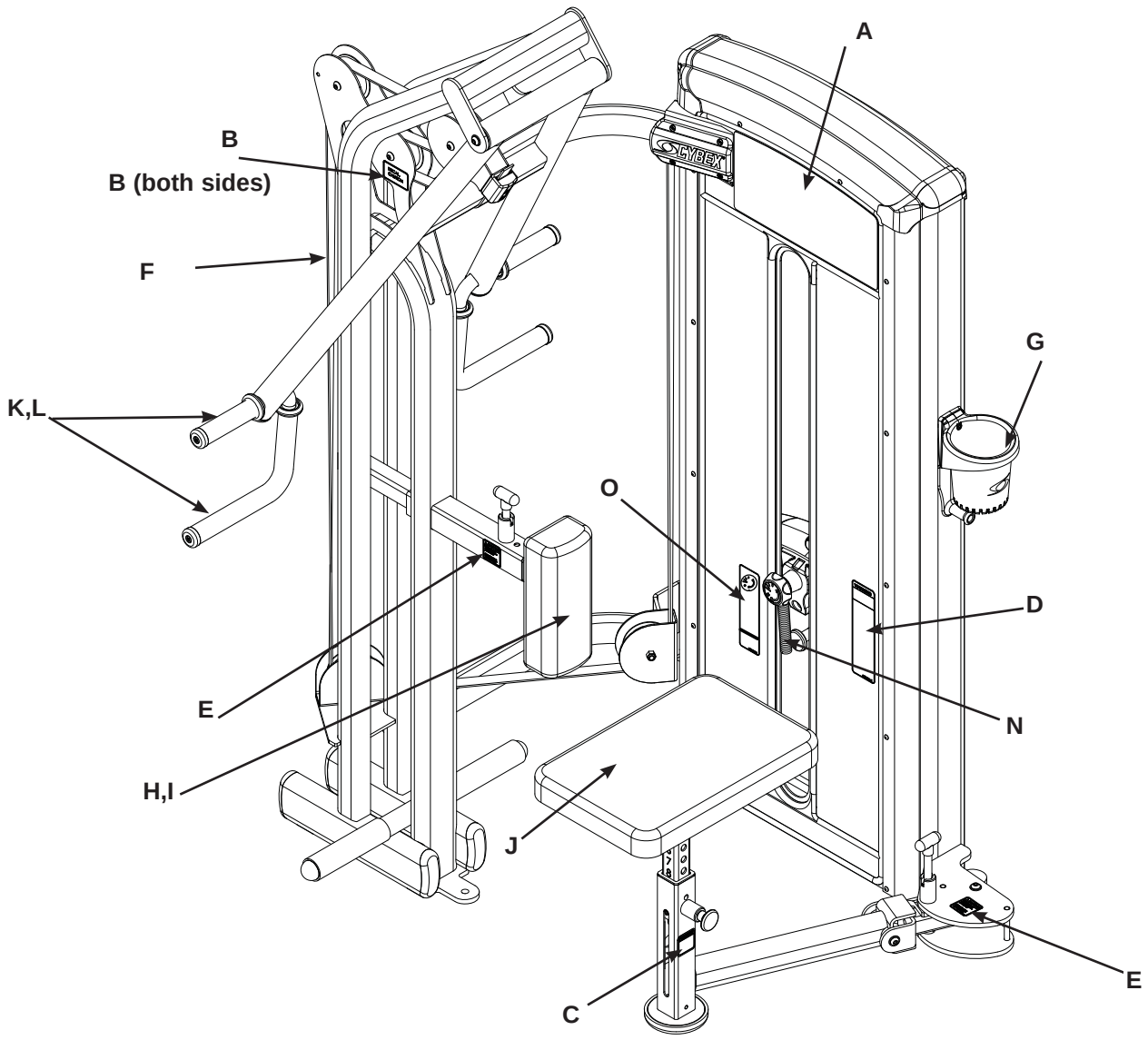

NOTE: *See exploded-view diagram for location of M (serial number decal).*

	DESCRIPTION	PART NO.
A.	Placard Decal	14030-598-4
B.	Caution Decal	4000Y316-4
C.	Caution Decal	4520-362-4
D.	Warning Label	4605-381-4
E.	Caution Decal	8500-025-4
F.	Weight Stack Belt 210".	GB000202
G.	Water Bottle Holder	13000-400

	DESCRIPTION	PART NO.
H.	Back Pad w/Wear Cover	4800-023
I.	Wear Cover	4800-095
J.	Seat Pad	5207S043-0
K.	Grip	14030-320
L.	Grip	4605-504
M.	Serial Number Decal	
N.	Weight Selector Pin	BH030207
O.	Increment Weight Decal	14000-407-4

ITEM	QTY	PART NO.	DESCRIPTION
1	2	11190-350	RUBBER GRIP
2	2	08001	PLUG 1.50
3	2	08171	SHIM, TAPERED RUBBER
4	1	08229	P/PIN,DETENT
5	1	11000-384	BLOCK, STOP
6	1	11040-301	CLAMP BLOCK INSERT
7	2	11040-409	MOLDED BUMPER PAD
8	1	11040-440	KNOB
9	1	11050-374	PIVOT PIN
10	1	11050-375	PIVOT PIN
11	4	11090-374	END CAP
12	4	11090-376	RING, HANDLE GRIP
13	1	12000-337	SHAFT, PIVOT, 12.75
14	1	12000-466	PULLEY COVER
15	1	12000-376	PANEL INSERT
16	2	12000-387	EXTRUSION, INC WT CHANNEL
17	1	12000-392	CHANNEL, INCREMENT WEIGHT
18	1	12000-394	CHANNEL, INCREMENT WEIGHT
19	1	12000-395	TOP CAP
20	2	12000-396	END CAP
21	4	12000-398	SPACER
22	2	12060-350	WT ROD .625 X 54.63
23	2	12090-322	FOOT PAD
24	2	12102-330	INSERT, INCREMENT WEIGHT
25	2	12210-347	GUIDE ROD CAP
26	2	12210-348	GUIDE ROD CAP
27	1	13000-103	GAS SPRING ASSEMBLY
28	2	13000-353	FOOT PAD
29	1	13000-365	INSERT PLASTIC, 7.94 (MODIFIED)
30	1	13000-400	HOLDER, WATER BOTTLE
31	1	13000-402	MOUNT, WATER BOTTLE HOLDER
32	1	14000-400	DECAL, WEIGHT PLATE
33	1	14030-200	W MAIN FRAME
34	1	14030-201	W INPUT ARM
35	1	14030-202	P CUSHION TUBE
36	1	14030-204	P/SEAT POST
37	1	14030-205	W/SEAT POST
38	1	14030-319	DETENT PIN
39	1	14051-007	TOP WEIGHT ASSY 15
40	1	4605-512	INSERT PLASTIC, 7.94
41	1	4816-205	W/ PIVOT ARM
42	1	4816-327	FOOT PAD
43	1	4816-332	P/DETENT PIN
44	2	4816-336	KNOB, PLASTIC T-SHAPE
45	1	51198	WARRANTY BOOK (NOT SHOWN)

ITEM	QTY	PART NO.	DESCRIPTION
46	3	BS070201	COM SPRING .56 x .66 1.50 LG
47	2	BS070208	COMPRESSION SPRING
48	1	CM000211	DECAL, PATENT PENDING
49	2	FB030232	BEARING, RADIAL 17 mm EXT RACE
50	4	FB130207	BRG FLG 17mm X 19mm X 25mm
51	2	FC030006	TOLERANCE RING 1.575 ID
52	210”	GB000202	BELT, .95 WIDE
53	7	gp000209	PULLEY ASSEMBLY-3.50
54	1	HC622808	SHCS .250-20 X .250
55	7	HC700428	BHSCS .375-16 X 2.25
56	4	HF449063	INSERT 3/4 X 1/4-20
57	12	HF579000	PANEL FASTNER, 10-24 U TYPE
58	7	HN704901	LOCKNUT, .375-16 NYLON
59	2	HP286819	SPIRAL PIN .188 X 1.12
60	6	HS347600	WASHER, SAE .375
61	10	HT512517	TAP SC 10-24 X 1.00 TYPE WB PN HD PHIL BLACK
62	1	HT552515	TAP SC NO. 8-16 X .75 PLASTITE PN HD PHIL BLACK
63	4	HT570410	SCREW, PNH TORX 10-24 X .375, BLACK
64	12	HX570412	BHSCS, 10-24 X .50, SS
65	2	HY740000	SET SCREW
66	2	JC620415	BHSCS .250-20 X .75
67	4	JC620422	BHSCS .250-20 x 1.50
68	2	JC620914	FHSCS .250-20 X .625
69	6	JC700412	BHSCS .375-16 X .50
70	4	JC700420	BHSCS .375-16 X 1.25
71	4	JS347400	LOCKWASHER, INT TOOTH .375
72	2	PP080226	INSERT, DOMED PLASTIC 2.00, RIB
73	1	PP090211	INSERT, PL 1.50 SQ X 10-14 GA
74	4	PP130002	INSERT, DOMED PLASTIC
75	2	PR060005	BUMPER, WEIGHT
76A	2	14030-320	GRIP 1.38 OD X .96 ID
76B	2	4605-504	GRIP 1.38 OD X .96 ID
77	1	4800-023	CHEST PAD W/WEAR COVER
78	1	4800-095	WEAR COVER
79	1	5207S043-0	SEAT PAD
80	1	14030-999-4	MANUAL (NOT SHOWN)
81	1	14030-598-4	PLACARD
82	1	4605-381-4	DECAL, WARNING
83	2	8500-025-4	DECAL, CAUTION
84	1	4520-362-4	DECAL, CAUTION
85	2	4000Y316-4	DECAL, CAUTION
86	1	14000-407-4	INCREMENT WEIGHT DECAL
87	1	11040-790	DECAL, MADE IN U.S.A.

14030 VR3 TA MAIN ASSEMBLY

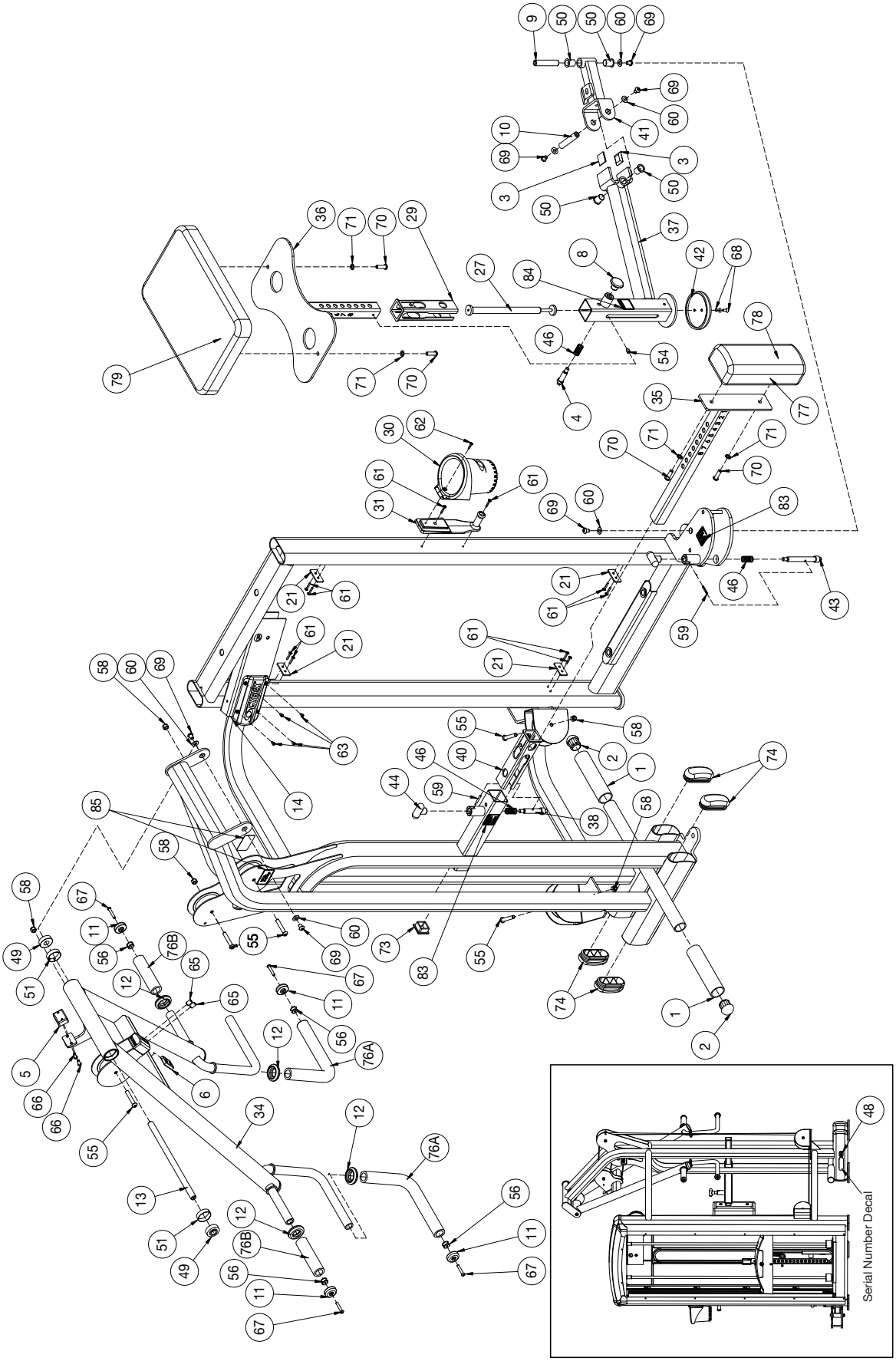

14030 ROW PANEL ASSEMBLY DETAIL

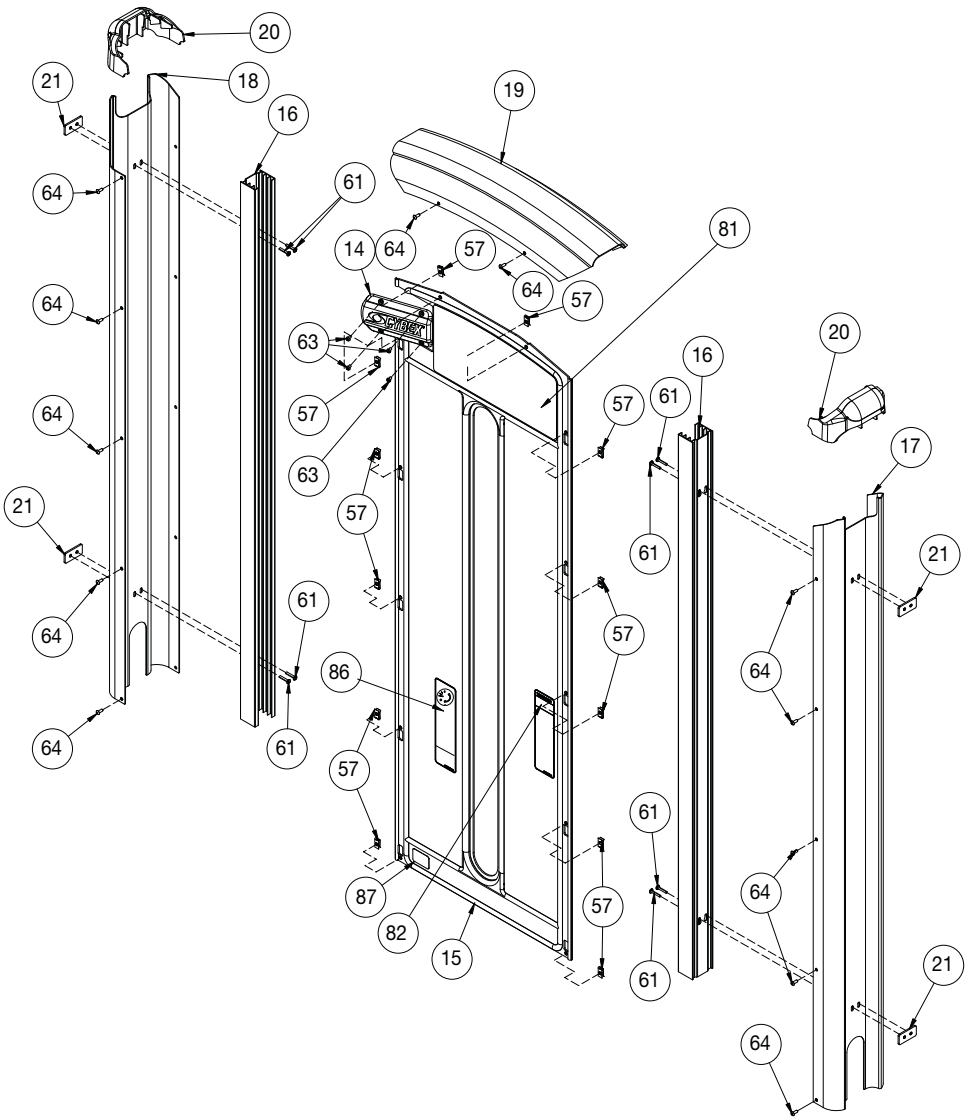

Top Weight Assembly
(Light Stack and Heavy Stack Configurations)

ITEM	QTY	PART NO.	DESCRIPTION
1	1	11040-366	Top Weight Assembly, Molded
2	1	11040-367	Hub, Molded
3	2	11040-369	Rod, Linkage
4	2	11040-370	Pin
5	1	11040-427	Rod
6	1	11040-426	Stem
7	1	11040-424	Cover Plate
8	1	11040-416	Cover, Top Weight
9	1	11040-425	Knob
10	1	BH030207	Pin, Weight Selector
11	1	4700-251	Lifting Post 15
12	4	BR030209	External Retaining Ring .188
13	2	BR030220	Internal Retaining Ring 1.250
14	1	HP016820	Cotter Pin .125 X 1.25
15	1	HP266765	Roll Pin, .125 X .938
16	2	HS720004	Felt Washer, .641 1.250 .125 T

ITEM	QTY	PART NO.	DESCRIPTION
17	4	HT562715	Tap SC NO 10 x .750 F Phil
18	4	HT582510	Tap SC NO 10 x .375 PN HD Phil
19	2	11040-409	Molded Bumper Pad
20	12	11040-572	Guard, Increment Weight
21	6	11040-573	Weight Increment
22	1	11040-216	Belt Clamp
23	1	11040-301	Clamp Block Insert
24	1	11040-428	Adjustment Decal
25	1	HT552512	Screw, Pan HD Phil HD Self Tapping 8-16 x .50, Type WB
26	3	HY740000	Set Screw
27	11	4000C101	Weight Plate Light Stack
27	14	4000C101	Weight Plate Heavy Stack
28	1	12050-020	Light Weight Pack (Not Shown)
29	1	12070-021	Heavy Weight Pack (Not Shown)

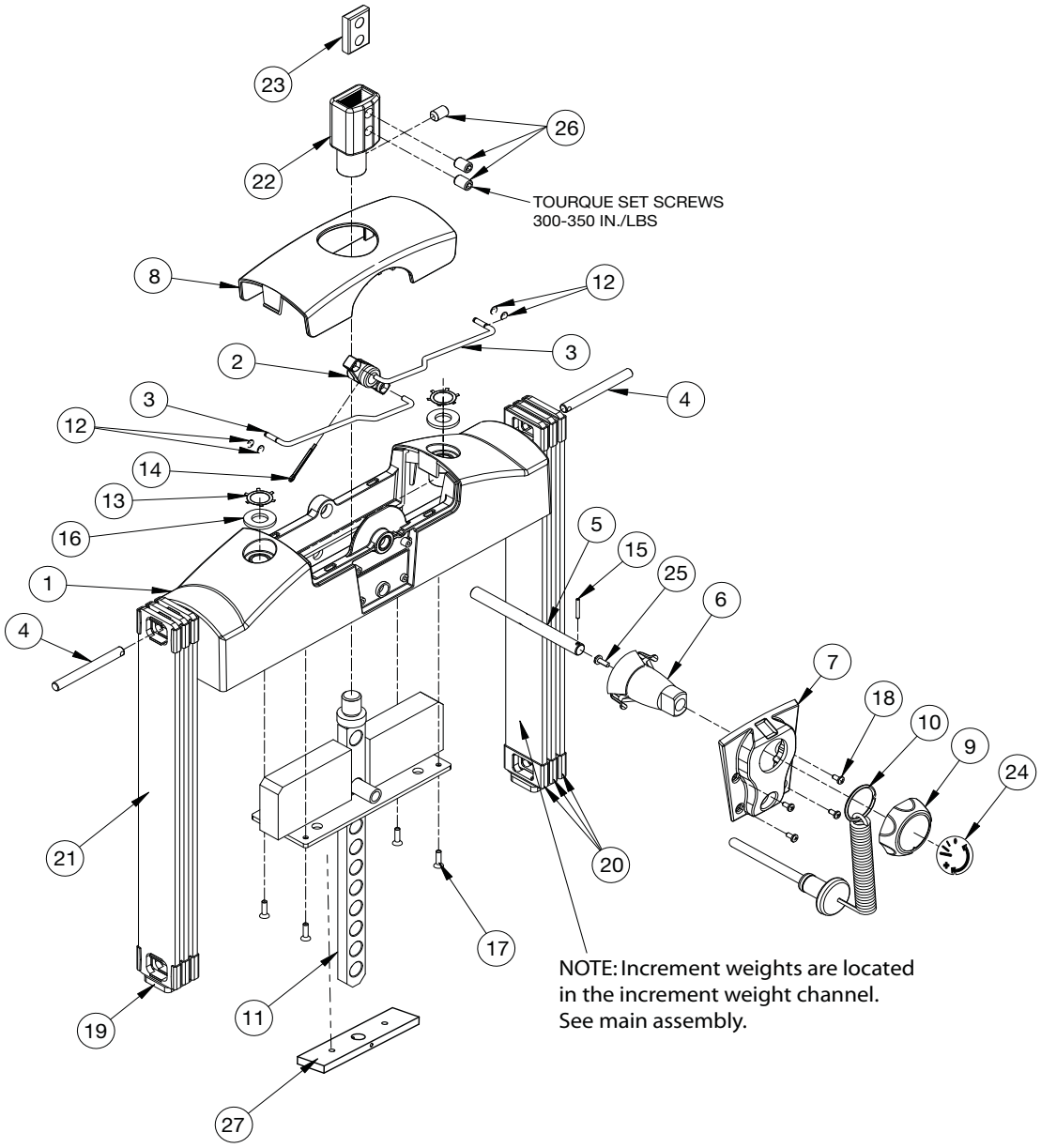

Belt Routing Assembly Detail

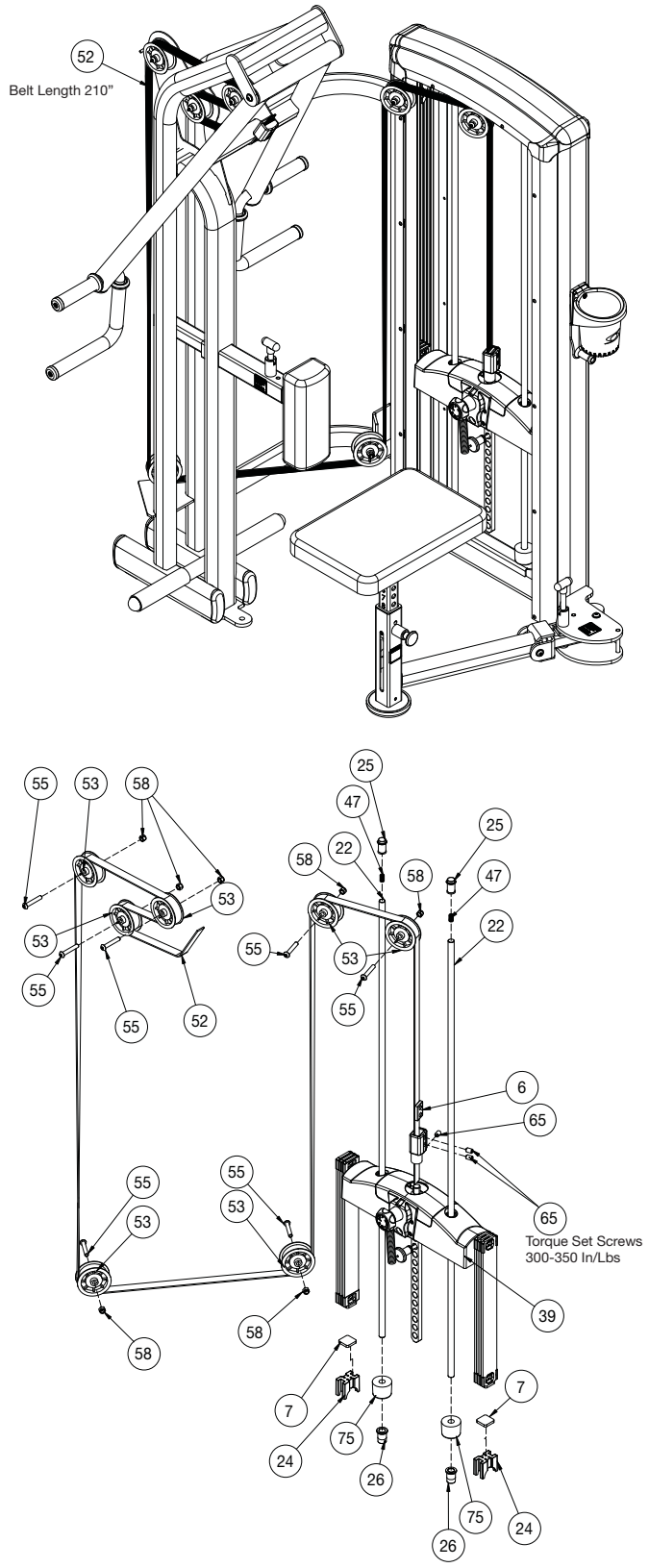

10 Trotter Drive Medway, MA 02053 • 508-533-4300 • FAX 508-533-5183
www.cybexinternational.com • Techhelp@cybexintl.com